Mikalor Supra® Heavy Duty Hose Clamps

D Manual or automatic assembly.

C Bolt custom-manufactured by Mikalor for the Supra range.

E This revolutionary design feature makes it impossible for the captive nut or trunnions to be dislodged.

F The swivelling bridge makes it easy to assemble and remove the Supra clamp. It also prevents deformation of the bridge during application.

B Three spot welds with protruberances guarantee excellent response in applications which require very high torque.

G Supra complies with DIN 3017-3 and the EC directive 2002/95/EC dated 1st July 2006.

H Bevelled band edges protect the hose from damage.

A All Supra clamps are marked with the application range, material quality and the Mikalor logo.

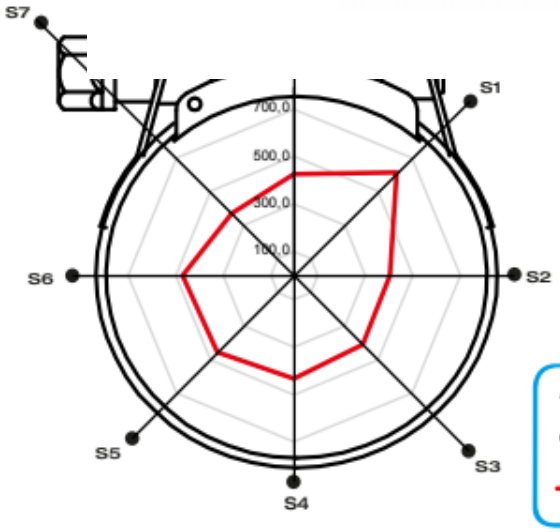

MADE IN SPAIN

Polar Diagram

Sectors	S1	S2	S3	S4	S5	S6	S7	S8
35 Nm	611,0	404,0	410,0	435,0	456,0	472,0	372,0	428,0

Torque / Efficiency [Nm / daN]

Oxydent B.V. Dijkgraaf 17, 6921 RL DUIVEN, The Netherlands T: +31 85 8771928 E : info@oxydent.nl W: www.oxydent.nl